Sample Outhouse

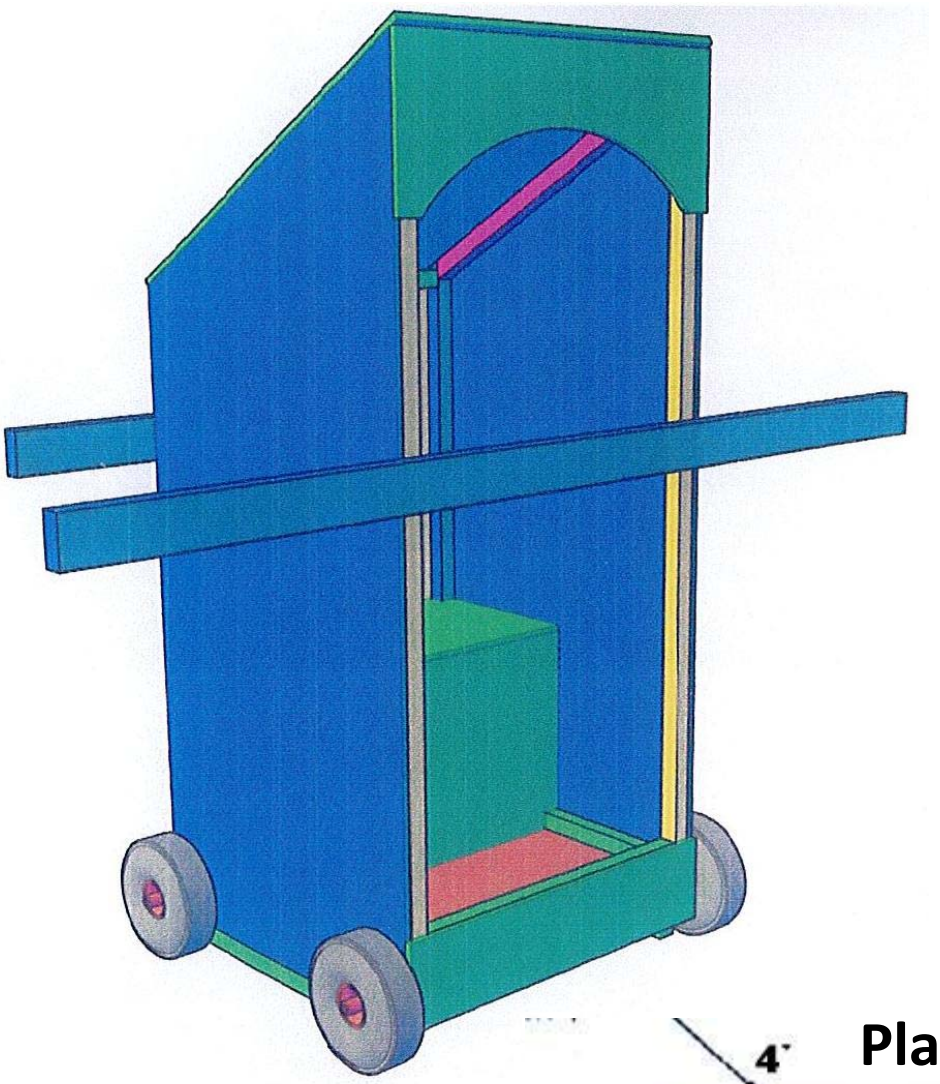
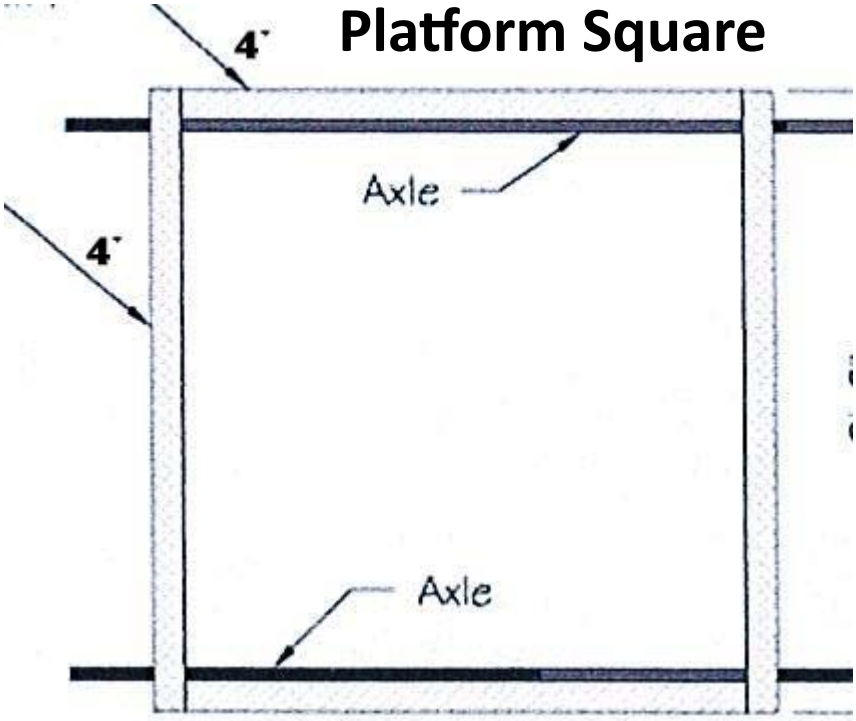
Platform Square